STEEL BRIDGE MATERIAL LIST

MEMBER	LENGTH	QUANTITY
W12x111	35'-0"	6
W16x26	4'-4" ±	10
W12x40	4'-4" ±	12
W6x25	4'-1"	16
½" STIFFENER PLATE FOR W21x111	-	16
½" FACE PLATE FOR W6x25	-	16
¼" STIFFENER PLATE FOR W6x25	-	32
¼" END PLATE FOR W6x25	-	16
5/16" SHEAR PLATE FOR W16x26	-	8
½"x4" PLATE OR HSS4x4x¼" MUDSILL	35'-0"	2
PRE-CASE CONCRETE DECKS	-	8

NOTES:

1. REFER TO PLANS FOR ANCHOR BOLTS
2. CONSTRACTOR IS RESPONSIBLE TO VERIFY ALL MEMBERS, LENGTHS, AND QUANTITIES
3. REFER TO PLANS FOR PRE-CAST CONCRETE DECKS

GENERAL CONDITIONS

1. THE CONTRACTOR SHALL VERIFY AND REVIEW ALL ITEMS WITHIN THE DRAWINGS PRIOR TO PROCEEDING WITH THE WORK. NOTIFY THE ENGINEER/ARCHITECT IMMEDIATELY WITH ANY DISCREPANCIES.
2. IF A SPECIFIC DETAIL IS NOT SHOWN FOR ANY PART OF THE WORK, THE CONSTRUCTION SHALL BE THE SAME AS FOR SIMILAR WORK.
3. DIMENSIONS ARE NOT TO BE SCALED FROM THE PLANS, SECTIONS OR DETAILS WITHIN THE DRAWINGS.
4. THE CONTRACTOR SHALL BE SOLELY RESPONSIBLE FOR THE CONSTRUCTION MEANS, METHODS, TECHNIQUES, SEQUENCE AND PROCEDURES.
5. ALL WORK SHALL CONFORM TO THE MINIMUM STANDARDS OF THE REFERENCED BUILDING AND ALL OTHER REGULATING AGENCIES, EXERCISING AUTHORITY OVER ANY PORTION OF THE WORK.
6. SPECIFIC NOTES AND DETAILS IN THE DRAWINGS SHALL TAKE PRECEDENCE OVER GENERAL NOTES AND SPECIFICATIONS.
7. NOTIFY THE ENGINEER OF ALL CHANGES MADE IN THE FIELD PRIOR TO INSTALLATION.

NOTES:

1. DRAINAGE PLAN PER DEPT. OF ECOLOGY MAY BE REQUIRED.
2. EROSION CONTROL PLAN PER DEPT. OF FISHERIES MAY BE REQUIRED.
3. LOADING PER:
   HS20-44, HL-93
4. CONCRETE: f'c = 4000 PSI AT 28 DAYS
5. STRUCTURAL STEEL: ASTM A709 (Gr. 50 KSI) OR A992 (Gr. 50 KSI)
6. BOLTS: ASTM A325 HDG
7. REINFORCING STEEL: ASTM A615: GRADE 60
8. WELDED REINFORCING STEEL: ASTM A706: GRADE 60
9. STRUCTURAL WELDING: ALL WELDS TO BE ¼" CONTINUOUS FILLET WELDS USING DRY E70 ELECTRODES.
10. ALL STEEL TO BE COATED WITH A HIGH SOLIDS NON-GALVANIC EPOXY COATING.
11. LAP CONTINUOUS REINFORCING BARS 48 BAR DIAMETERS
12. REINFORCEMENT COVER:
    FORMED SURFACE: 1½" #5 BAR AND SMALLER
    FOOTINGS: 3" TO EARTH AND 2" TO FORMED SURFACE

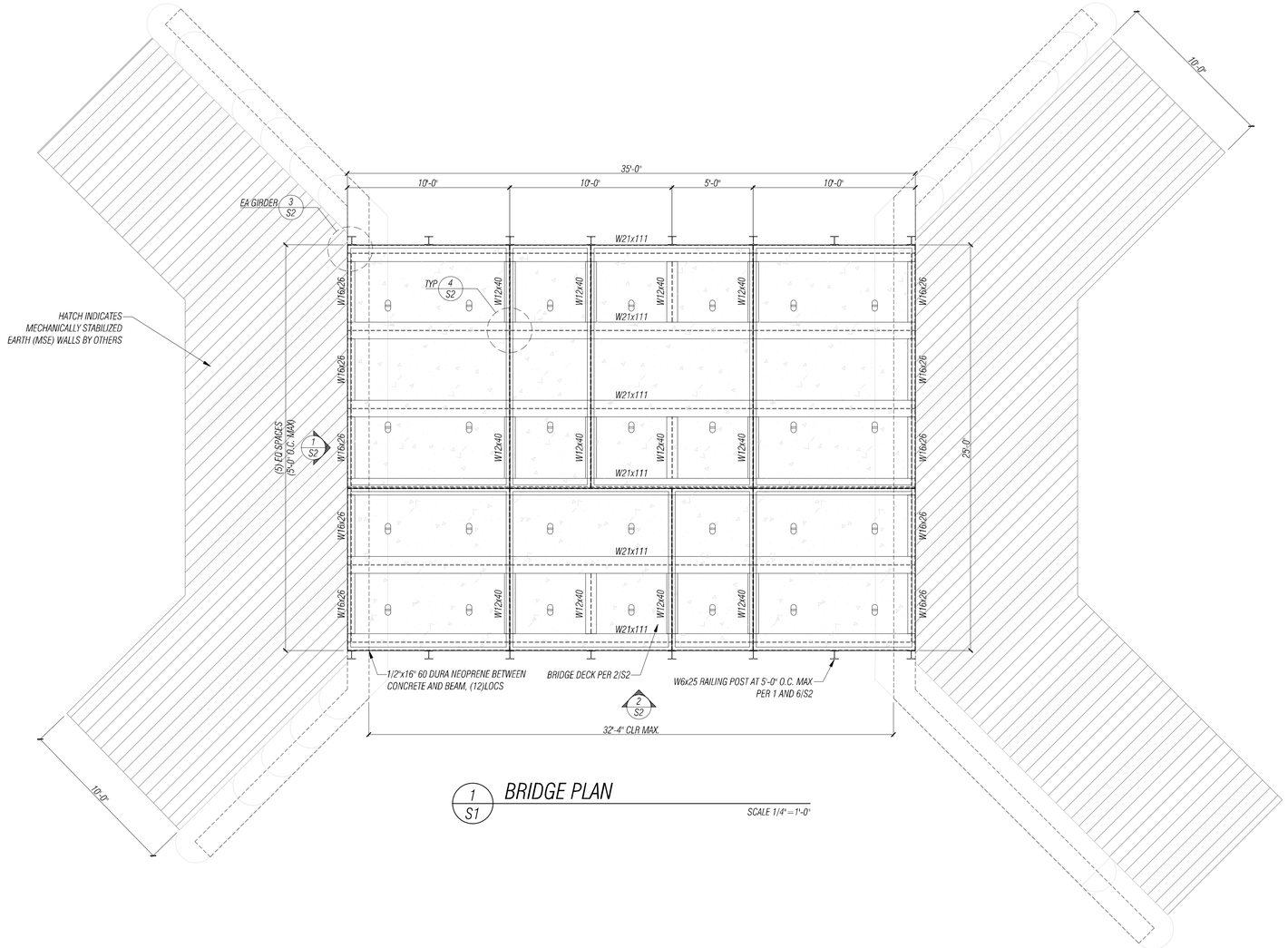

1/S1 BRIDGE PLAN

SCALE 1/4" = 1'-0"

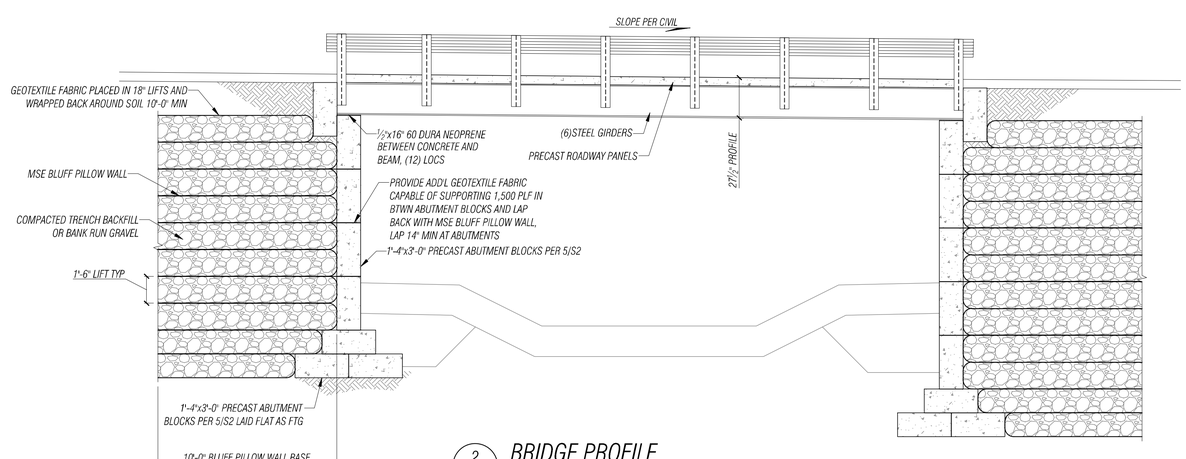

2/S1 BRIDGE PROFILE

SCALE 1/4" = 1'-0"

NO.	DATE	BY	REVISION

ANY INFORMATION OR DATA ON THIS DRAWING IS NOT INTENDED TO BE SUITABLE FOR REUSE BY ANY PERSON, FIRM, CORPORATION, OR ANY OTHERS ON EXTENSIONS OF THIS PROJECT OR FOR ANY USE ON ANY OTHER PROJECT. ANY REUSE WITHOUT WRITTEN VERIFICATION AND ADAPTATION BY THE ENGINEER FOR THE SPECIFIC PURPOSE INTENDED WILL BE AT THE USER'S SOLE RISK AND WITHOUT LIABILITY OR LEGAL EXPOSURE TO THE ENGINEER.

FACET
P: 360.899.1110
www.facetnw.com
2210 Riverside Dr,
Suite #110
Mount Vernon, WA 98273
FEDERAL WAY | KIRKLAND | MOUNT VERNON | SEATTLE | SPOKANE | WHIDBEY ISLAND

JORDAN M. JANICKI
STATE OF WASHINGTON
46132
STRUCTURAL ENGINEER
PROFESSIONAL ENGINEER
Jordan Janicki
07.25
23-0700

BRUSH CREEK FISH PASSAGE BRIDGE

YAKIMA TRIBAL LAND
YAKIMA COUNTY, WA
PROJECT NUMBER: 2401.9401.05

PERMIT SUBMITTAL

PLAN AND PROFILE

DATE: 07/25/2025

PLAN NUMBER:

S1

FILE LOCATION: Z:\SHARED\PROJECTS\ACTIVE\2024\01\2401.9400 JANICKI LOGGING\2401.9401.05 BRUSH CREEK FISH PASSAGE BRIDGE\DRAWINGS\CAD-REVIT\ACTIVE\FILE\BRUSH CREEK_S1.DWG - ORIGINAL SHEET SIZE: ARCH FULL BLEED D (24.00 X 36.00 INCHES) - LAST MODIFIED BY: CHAD REIMER
PRINCIPAL: JJ PROJECT MANAGER: SDT DESIGNED BY: CR DRAWN BY: JH CHECKED BY: JJ

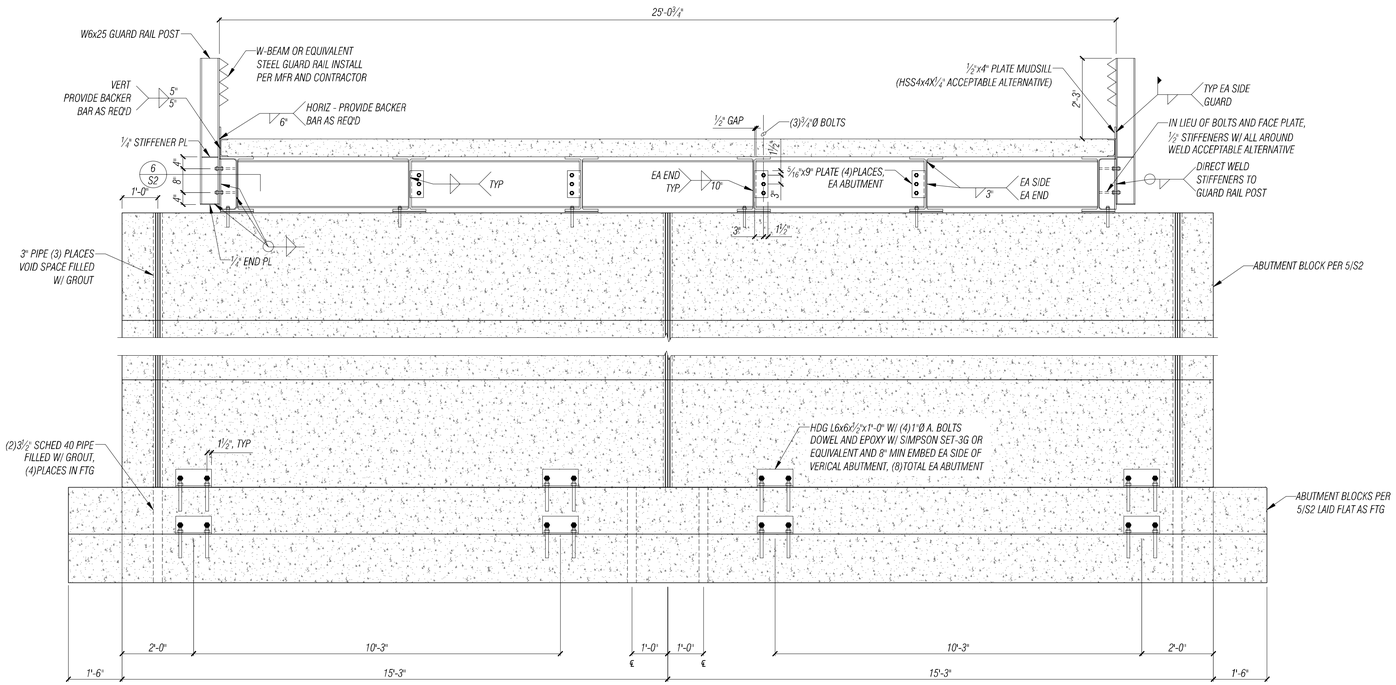

1 S2 BRIDGE ELEVATION

SCALE 1/2" = 1'-0"

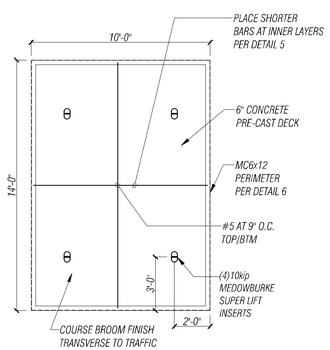

2 S2 BRIDGE PANEL PLAN

SCALE 1/4" = 1'-0"

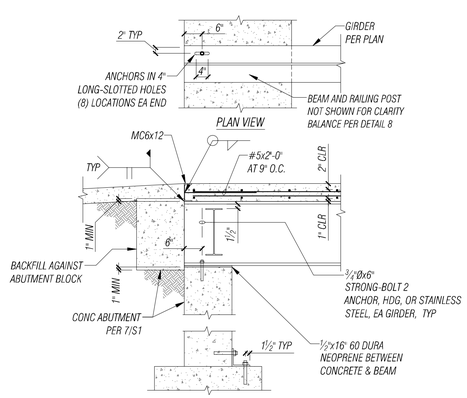

3 S2 BRIDGE SECTION

SCALE 1/2" = 1'-0"

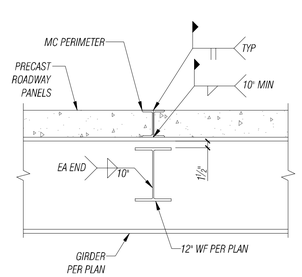

4 S2 BRIDGE SECTION

SCALE 3/4" = 1'-0"

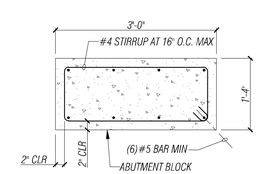

5 S2 BRIDGE SECTION

SCALE 3/4" = 1'-0"

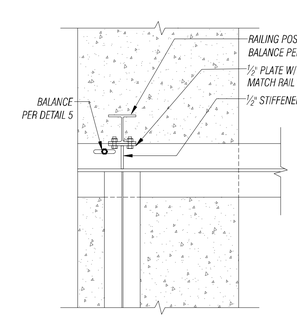

6 S2 BRIDGE SECTION

SCALE 3/4" = 1'-0"

NO.	DATE	BY	REVISION

ANY INFORMATION OR DATA ON THIS DRAWING IS NOT INTENDED TO BE SUITABLE FOR REUSE BY ANY PERSON, FIRM, CORPORATION, OR ANY OTHERS ON EXTENSIONS OF THIS PROJECT OR FOR ANY USE ON ANY OTHER PROJECT. ANY REUSE WITHOUT WRITTEN VERIFICATION AND ADAPTATION BY THE ENGINEER FOR THE SPECIFIC PURPOSE INTENDED WILL BE AT THE USER'S SOLE RISK AND WITHOUT LIABILITY OR LEGAL EXPOSURE TO THE ENGINEER.

FACET
P: 360.899.1110
www.facetnw.com
2210 Riverside Dr, Suite #110
Mount Vernon, WA 98273
FEDERAL WAY | KIRKLAND | MOUNT VERNON | SEATTLE | SPOKANE | WHIDBEY ISLAND

JORDAN M. JANICKI
STATE OF WASHINGTON
46132
STRUCTURAL ENGINEER
PROFESSIONAL ENGINEER
Jordan Janicki
2025.07.25
14:50 -07'00'

BRUSH CREEK FISH PASSAGE BRIDGE

YAKIMA TRIBAL LAND
YAKIMA COUNTY, WA
PROJECT NUMBER: 2401.9401.05

PERMIT SUBMITTAL

ELEVATION AND DETAILS

DATE: 07/25/2025
PLAN NUMBER:
S2

FILE LOCATION: Z:\SHARED\PROJECTS\ACTIVE\2024\01\2401.9401 JANICKI LOGGING\2401.9401.05 BRUSH CREEK FISH PASSAGE BRIDGE\DRAWINGS\CAD-REVIT\ACTIVE\BRUSH CREEK_S1.DWG - ORIGINAL SHEET SIZE: ARCH FULL BLEED D (24.00 X 36.00 INCHES) - LAST MODIFIED BY: JOEL HARKNESS
PRINCIPAL: JJ PROJECT MANAGER: SDT DESIGNED BY: CR DRAWN BY: JH CHECKED BY: JJ